Page 5 **Adjustment**

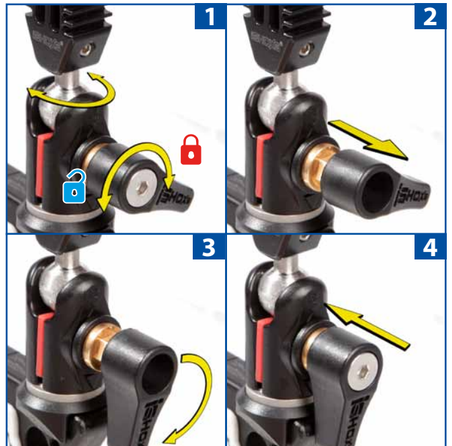

Page 6 **Usage**



Page 7 **Delivery contents**

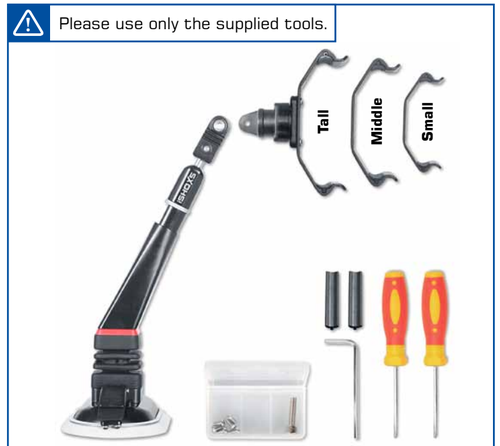

iSHOXS Service Center North America
customercare@ishoxs.us
www.ishoxs.us

© 2022 iSHOXS® America Inc. | Subject to change | iSHOXS® and their respective logos are registered trademarks. All rights reserved.

Power Force Cup Traffic

Suction cup with adjustable arm

Installation and usage instructions



iSHOXS PROFESSIONAL

Scan the QR Code

Limited Warranty on iSHOXS Mounting Products and Limitation of Liability.

www.ishoxs.us/disclaimer

CAUTION: Our products have a high clamping force, which means that damage to the clamping points can occur if the clamping setting is too high. Please use extreme caution when applying the clamping device.

CAUTION: Keep the products out of the reach of children, as improper use may result in death or serious injury. ISHOXS products are not toys. Small parts such as screws, small spare parts, etc. and plastic packaging can also be swallowed and lead to suffocation. Some of the products are supplied with tools that may be pointed or sharp. These must be handled with appropriate caution and assembly skills, otherwise injuries may also occur. Our products should only be installed by a person who has basic manual skills! In case of doubt, the product can be returned.

CAUTION: The products must never be attached to the body!

ATTENTION: All iSHOXS mounts are delivered with a security cord to secure cameras. Cameras mounted on iSHOXS mounts shall always be tied to the handlebar or rail or otherwise to the product to prevent loss of or damage to the camera in the event of an accident. We are not responsible for any loss or damage to cameras or other third-party products.

CAUTION: Check bar or rail for predetermined breaking points before installing the iSHOXS mount. The mount must not be fixed to bars or rails with predetermined breaking points.

CAUTION: Check the secure hold of the suction cup before use by pulling the centerpiece towards you. If the suction cup is loose or comes off, reattach by following mounting instructions and recheck the secure hold before use.

The supplied accessories (tools, accessories, spare parts, etc.) may not be misused and may only be used in connection with the product! Illustrations and images may show color variants, optional accessories and products from other manufacturers. All trademark rights are the property of their legal rights holder and are used here only for the description or the identification of the devices. Subject to technical changes.

Page 1 **Assembly**

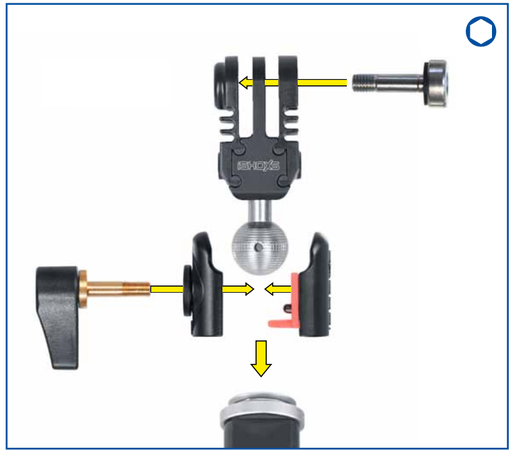

Page 2 **Assembly**

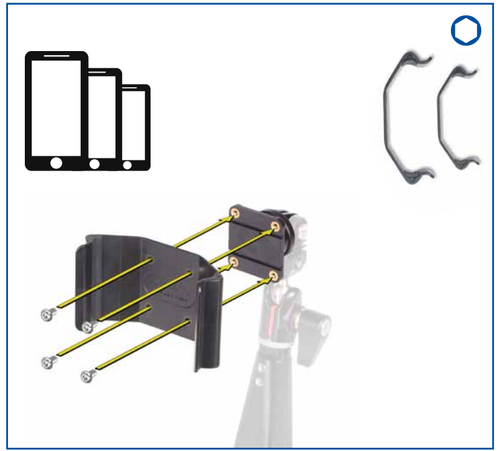

Page 3 **Assembly**

Clean the surfaces and materials before use.



Page 4 **Adjustment**

